GYRO3

ROTATING SWIVEL

INTERNATIONAL CE+ANSI | DESIGN PAT. PEND.

Ref. 2940

TEAM RESCUE, ROPE ACCESS, TREE CLIMBING, CONFINED

A compact and extremely versatile rigging system featuring our triple swivel design.

The Gyro3 rotates at all three connection points which allows for countless possibilities of connection between different elements that need freedom of movement. Just a few possibilities include: self-orienting multi-anchoring, multiple connections to a harness, preventing twisting in Y lanyards, cross-hauling operations, Tyrolean traverses, complex rescue procedures. The innovative design also prevents the accumulation of dirt and makes inspection easy.

Main structure is carbon steel with a double corrosion preventive coating. Swivel balls and attachment points are stainless steel. Includes three removeable silicon anti-rotation inserts.

Working load limit: 5 kN. Minimum breaking strength: 26 kN.

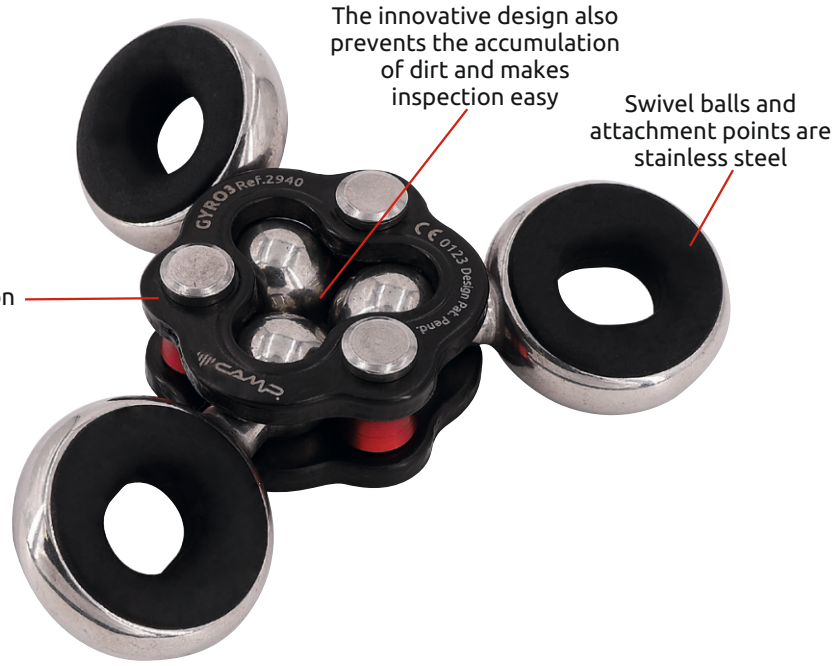





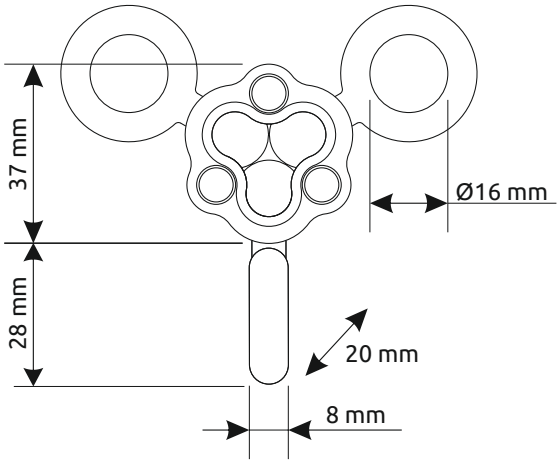

Ref.	Product name	Weight		Strength	Working load Max	Hole diameter	CE	ANSI	EAC
		g	oz	kN	kN	mm	PPE-R/11.135	Z359.12	
2940	GYRO3	155	5.5	26	5	3 x ø16	•	•	•

GYRO3

ROTATING SWIVEL

INTERNATIONAL CE+ANSI | DESIGN PAT. PEND.

Ref. 2940

TEAM RESCUE, ROPE ACCESS, TREE CLIMBING, CONFINED

GYRO ANTI-ROTATION INSERTS

3268 kit 10 pcs



Spare silicon anti-rotation inserts, compatible with all Gyro swiveling devices. Package of 10 pcs.

Ref.	Product name	Weight	
		g	oz
3268	GYRO ANTI-ROTATION INSERTS KIT 10 PCS	2 (1 pcs)	0.1 (1pcs)

